Waterloo GRF5509 Layout Review #1

12/12/25

Schematic checks out OK. Suggested impedance transformation on input shown. This will require placement of pads for new component = 8.2nH.

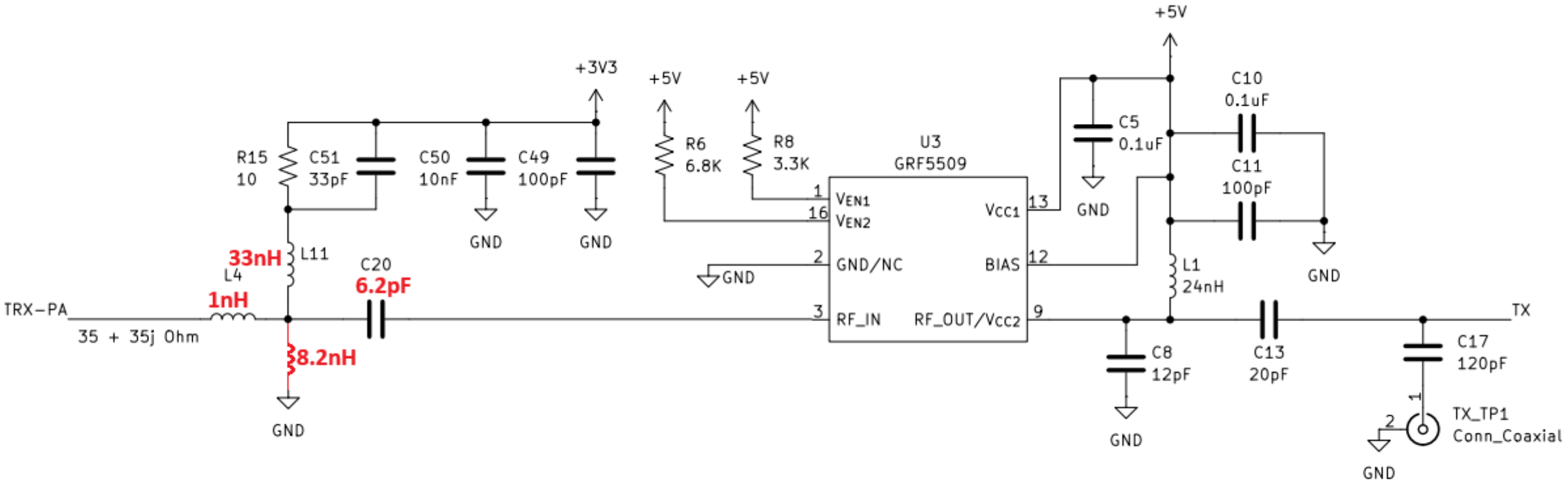

Several layout issues to discuss:

- **First, un-used areas on the top layer should be flooded with GND metal and vias incorporated (for more on that see next slide).**
- **Vcc should be jumpered to interstage pin 13 trace via J1. J1 should be an inductor or ferrite for isolation.**
- **Pads for L1 inductor should be incorporated. L1 will be a small value, or perhaps 0 ohm resistor like that used on GRF EVB.**
- **Very important, see we have moved C8 = 20pF much farther away from device. Multiple pads should be placed on PCB along output trace for tuning, then, after that, 20pF series DC block which is currently at C13 (C13 should be at end).**

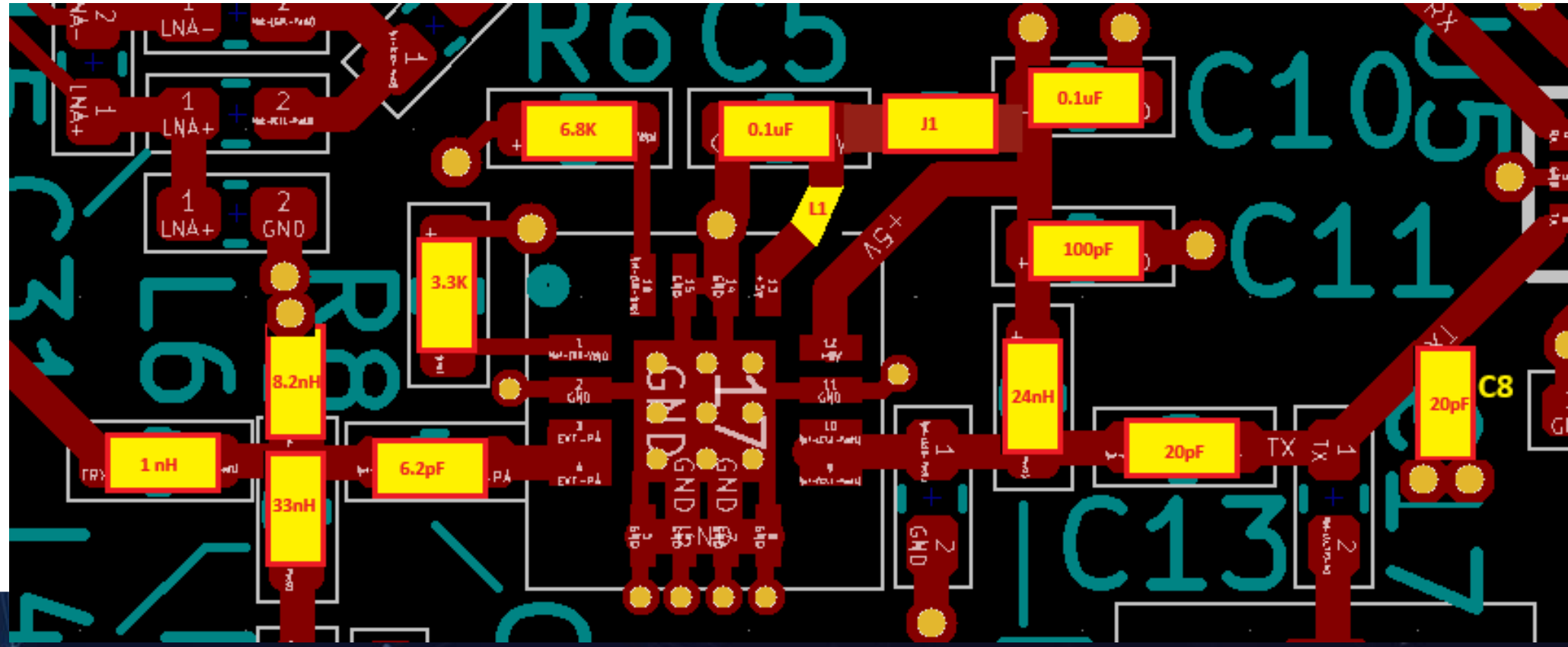

This picture only to drive home a concept. Top layer GND flood allows for via placement at very close proximity to component GND.

Go to GRF5509 product page and download GRF5509 EVB Gerber files:

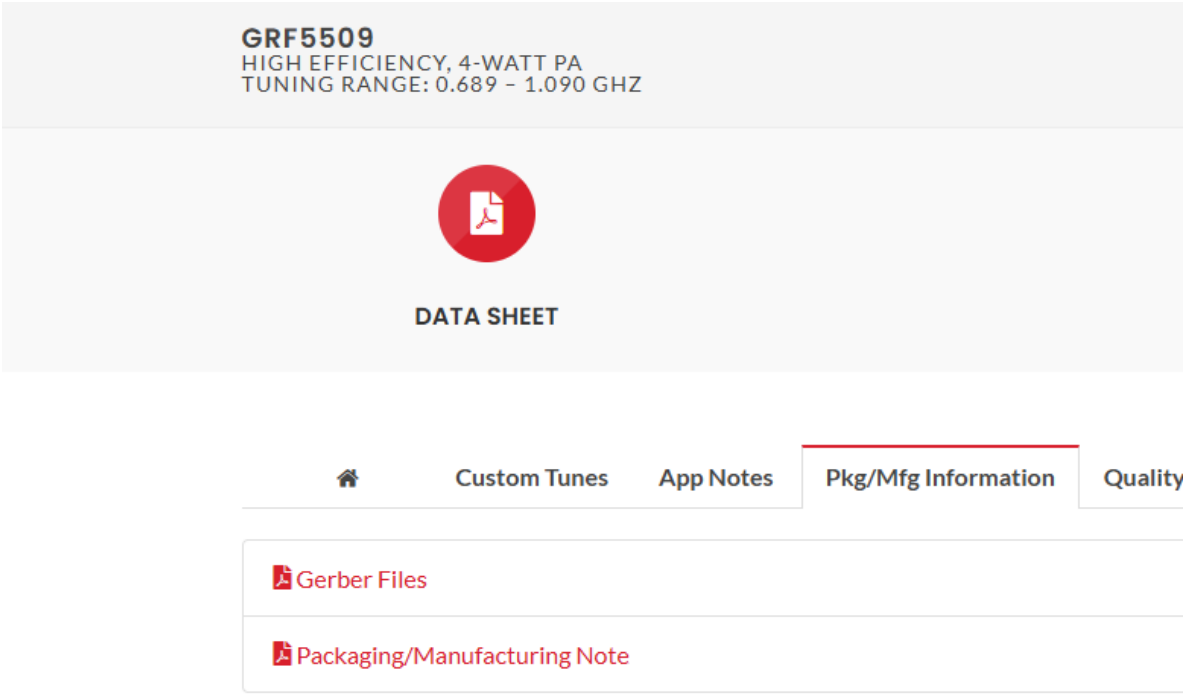

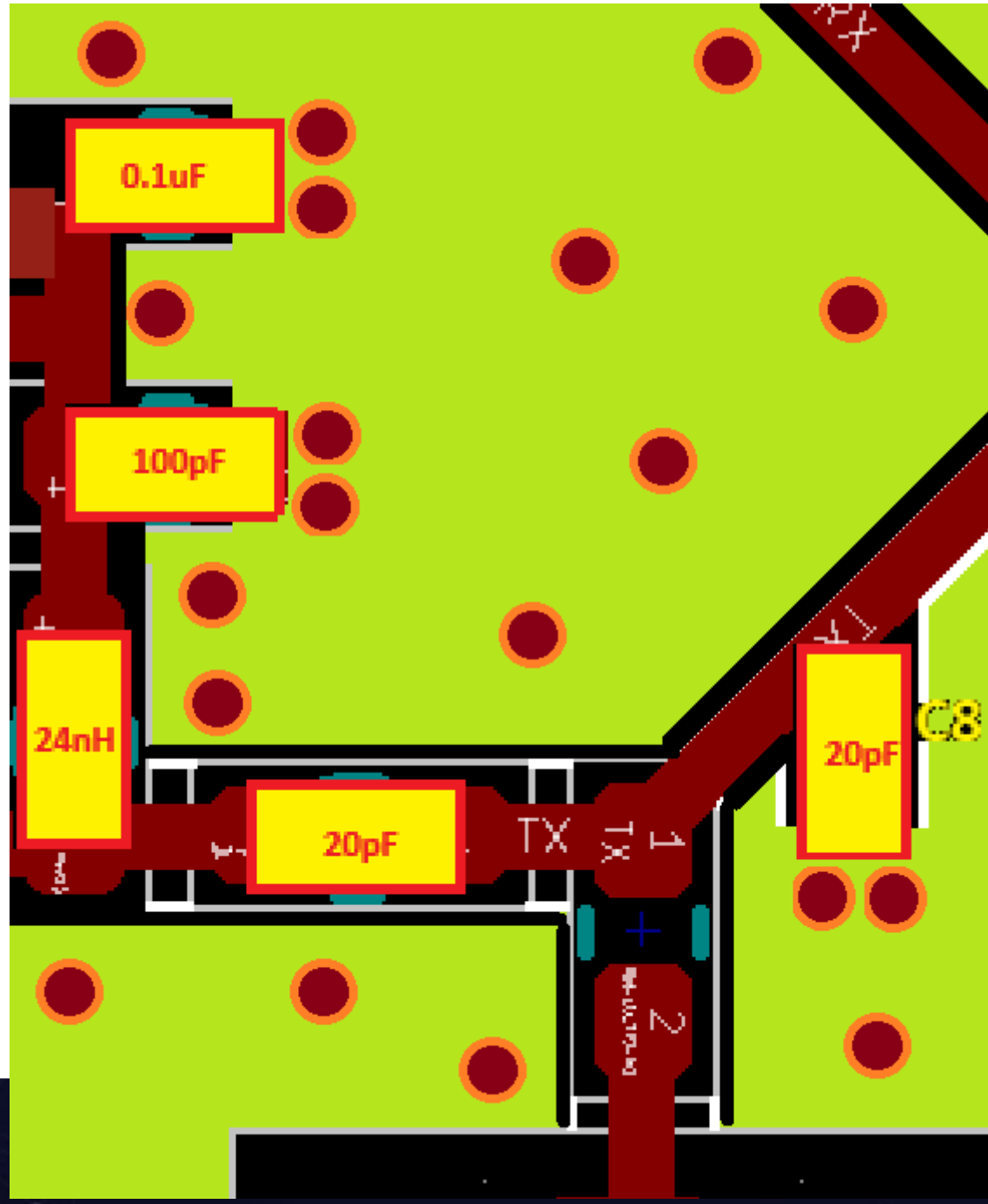

Contact Us

Frank Nicosia
Technical Director
fnicosia@guerrilla-rf.com
336-639-1625